OT FIT 36 /220-240/24 PC

CV Power supplies 24V with PC |

Product family features

- 24 V constant output voltage
- SELV
- Wide Ta range -20 – +50 °C
- Lifetime 50 000 h at tc max
- Dimming range: 3...100 % luminous flux
- Recommended to Use Trailing Edge dimmer

Product family benefits

- IP rating: IP20
- High efficiency
- Very stable output power
- High electronical reversible short-circuit, overload, overtemperature protection
- Independent installation possible

Areas of application

- Suitable for luminaires of protection classes I and II
- Hospitality – decorative lighting, night light
- Restaurants – decorative lighting
- Shops – decorative lighting, shelf lighting
- Residential – cove lighting, under cabinet lighting

© 2024, Inventronics GmbH. All rights reserved. Inventronics is a licensee of the OSRAM brand. OSRAM is a trademark of ams OSRAM.

Technical data

Electrical data

Nominal input voltage	220…240 V
Mains frequency	50/60 HZ Hz
Input voltage AC	198…264 V
Total harmonic distortion	< 15 %
Power factor λ	> 0.95
Efficiency in full-load	85 % [1]
Device power loss	6.0 W [2]
Inrush current	< 25 A [3]
Max. ECG no. on circuit breaker 10 A (B)	21
Max. ECG no. on circuit breaker 10 A (C)	33
Max. ECG no. on circuit breaker 16 A (B)	33
Max. ECG no. on circuit breaker 16 A (C)	53
Surge capability (L/N-Ground)	2 kV
Surge capability (L-N)	1 kV
Nominal output voltage	24.2 V
Nominal output power	2.42…36.3 W
Maximum output power	36.3 W [4]
Galvanic isolation	SELV
Output PWM frequency	3 k Hz

[1] at 230 V, 50 Hz

[2] At Full load, 230 V, 50 Hz

[3] t_{width} = 250 µs (measured at 50 % I_{peak})

[4] at steady state

© 2024, Inventronics GmbH. All rights reserved. Inventronics is a licensee of the OSRAM brand. OSRAM is a trademark of ams OSRAM.

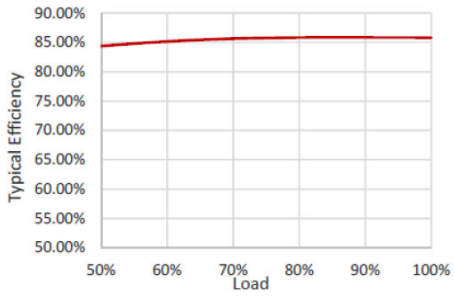

OT FIT 36 220-240 24 PC Typical Efficiency vs. Load

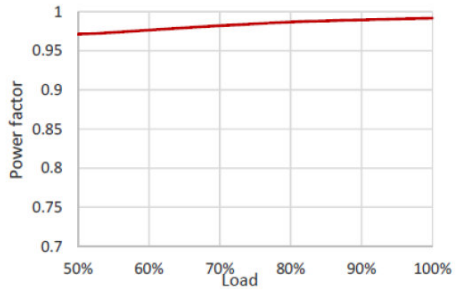

OT FIT 36 220-240 24 PC Typical Power Factor vs. Load

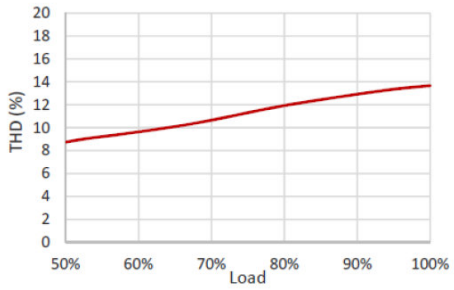

OT FIT 36 220-240 24 PC Typical THD vs Load

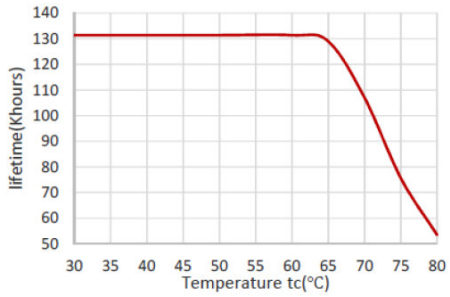

OT FIT 36 220-240 24 PC Lifetime vs Case Temp

© 2024, Inventronics GmbH. All rights reserved. Inventronics is a licensee of the OSRAM brand. OSRAM is a trademark of ams OSRAM.

Dimensions & weight

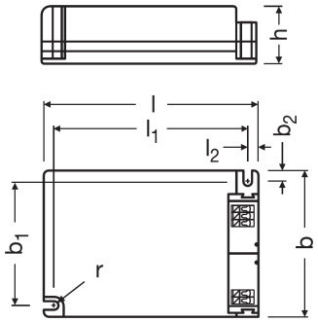

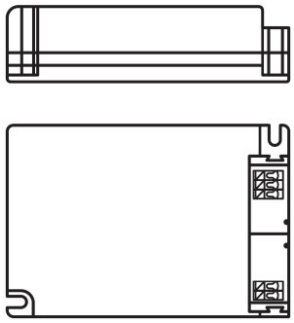

Mounting hole spacing, length	94.0 mm
Product weight	162.00 g
Cable cross-section, input side	0.5…1.5 mm²
Cable cross-section, output side	0.75…1.5 mm²
Wire preparation length, input side	7…8 mm
Wire preparation length, output side	7…8 mm
Mounting hole spacing, width	58.0 mm
Length	103.0 mm
Width	67.0 mm
Height	29.5 mm

Colors & materials

Casing material	Plastic

Temperatures & operating conditions

Ambient temperature range	-20…+50 °C
Maximum temperature at tc test point	80 °C
Max.housing temperature in case of fault	110 °C
Temperature range at storage	-20…80 °C
Permitted rel. humidity during operation	5…85 % [1)]

[1)] Maximum 56 days/year at 85 %

Lifespan

ECG lifetime	50000 h

Capabilities

Dimmable	Yes

© 2024, Inventronics GmbH. All rights reserved. Inventronics is a licensee of the OSRAM brand. OSRAM is a trademark of ams OSRAM.

Dimming interface	Phase Cut
Dimming range	3...100 %
Dimming method	PWM
Overheating protection	Yes
Overload protection	Yes
Short-circuit protection	Yes
No-load proof	Yes
Suitable for fixtures with prot. class	I
Type of connection, input side	Fixed connection (terminal)
Type of connection, output side	Fixed connection (terminal)
Control interface	Trailing edge dimmer recommended
Number of channels	1

Programming

Tuner4TRONIC	No

Certificates & standards

Approval marks – approval	CE / ENEC / CCC / RCM / UKCA / EAC / SELV / CB
Standards	Acc. to EN 55015/Acc. to EN 60598-1/Acc. to EN 61347-1/Acc. to EN 61347-2-13/Acc. to EN 61547/Acc. to EN 62384/CISPR 15/EN 55015
Protection class	II
Type of protection	IP20

Logistical data

Commodity code	85044083900

Environmental information

Information according Art. 33 of EU Regulation (EC) 1907/2006 (REACh)	
Date of Declaration	21-07-2023
Primary Article Identifier	4062172237390
Candidate List Substance 1	Lead
CAS No. of substance 1	7439-92-1
Safe Use Instruction	The identification of the Candidate List substance is sufficient to allow safe use of the article.
Declaration No. in SCIP database	a61cc393-322a-40a8-b7f8-20d7cac2fccb

© 2024, Inventronics GmbH. All rights reserved. Inventronics is a licensee of the OSRAM brand. OSRAM is a trademark of ams OSRAM.

Product datasheet

Download Data

	File
	User instruction OPTOTRONIC LED Power Supply
	Product Datasheet Product Datasheet OT FIT 36 PC (EN)
	Certificates CB certificate OT FIT 24V PC
	Certificates ENEC OT FIT 24V
	Certificates CCC certificate of OT FIT 36W free-standing
	Certificates CCC certificate of OT FIT 36W free-standing

Ecodesign regulation information:

Intended for use with LED modules.
The forward voltage of the LED light source shall be within the defined operating window of the control gear in all operating conditions including dimming if applicable.

Separate control gear and light sources must be disposed of at certified disposal companies in accordance with Directive 2012/19/EU (WEEE) in the EU and with Waste Electrical and Electronic Equipment (WEEE) Regulations 2013 in the UK. For this purpose, collection points for recycling centres and take-back systems (CRSO) are available from retailers or private disposal companies, which accept separate control gear and light sources free of charge. In this way, raw materials are conserved and materials are recycled.

Logistical Data

Product code	Product description	Packaging unit (Pieces/Unit)	Dimensions (length x width x height)	Volume	Gross weight
4062172237390	OT FIT 36 /220-240/24 PC	Shipping carton box 30	355 mm x 225 mm x 130 mm	10.38 dm^3	5302.00 g

The mentioned product code describes the smallest quantity unit which can be ordered. One shipping unit can contain one or more single products. When placing an order, for the quantity please enter single or multiples of a shipping unit.

Accessories Optional

Product description	Accessory name	Accessory code
OT FIT 36 /220-240/24 PC	OT CABLE CLAMP B-STYLE	4052899077881

© 2024, Inventronics GmbH. All rights reserved. Inventronics is a licensee of the OSRAM brand. OSRAM is a trademark of ams OSRAM.

Disclaimer

Subject to change without notice. Errors and omission excepted. Always make sure to use the most recent release.

© 2024, Inventronics GmbH. All rights reserved. Inventronics is a licensee of the OSRAM brand. OSRAM is a trademark of ams OSRAM.